SWA INNOVATION HUB

Potential Waste Opportunity – Recycled Crushed Glass

Business Case and Technical Specifications (Redacted version)

Project number 10092

South West Gateway Alliance

September 2021

Contents

1 Introduction

1.1 Purpose

The Sustainability Waste Alliance (SWA) Innovation Hub (via Level 5 Design Pty Ltd) is facilitating the preparation of a Business Case to supply recycled crushed glass (RCG) end product to the Bunbury Outer Ring Road (BORR) project (the 'Project') and other local road projects in the South West via a new glass recycling facility located in the South West. The aim of this Business Case is to present sufficient information for the South West Gateway Alliance (SWGA) to assess the commercial viability and value for money of potentially entering into a limited offtake guarantee on the BORR project and for potential funding organisations to co-invest in the Project.

1.2 Scope

The SWA Innovation Hub recently completed an analysis of the local market for RCG in the South West titled '*Potential Waste Opportunity – Recycled Crushed Glass' April 2021*. This companion report to that market analysis specifically addresses the components of a Business Case underpinning investment in an RCG facility and an RCG offtake guarantee for BORR and other Main Roads WA (MRWA) and local government projects. This includes:

- development of relevant RCG technical specifications;
- pricing (cost per tonne delivered on the Project site) of RCG materials; and
- business case preparation (including a Heads of Agreement).

The pricing component includes:

- A P90 estimate of the commercial rate ($/T) for RCG end product for use in local roads supplied to site (Bunbury, WA) based on tonnes available for the Project including costs for steps in the supply chain, such as supply chain infrastructure, processing plant and haulage to the Project site.
- A lifecycle cost analysis for RCG as a material in local government roads as per the Australian Transport Assessment and Planning (ATAP) Guidelines for a 'rapid' benefit-cost ratio analysis. This includes sensitivity analysis using standard variations in capital cost, benefits, and interest rates.
- Confirmation by suppliers of key factors (price, timing, volumes, etc).

The Business Case outlines:

- The quantum of RCG material available for the Project.
- Timing when tonnes are forecast to be available.
- Requirements for a commercially sustainable business in the South West.
- Supplier proposals to develop infrastructure and deliver RCG in the South West that meets project requirements.
- The risks and challenges associated with producing and utilising RCG in road related infrastructure in the South West.

This Business Case report complies with the requirements of the Project Brief titled 'Annexure A - Scope of Services Potential Waste Opportunity RCG Business Case - SWGA-00-135-10-MEM-0002.

1.3 Method

The SWA has been working on the opportunity of recycling glass into road projects for many months, as part of a State of Play and Project Business Case report into the potential of using RCG and other South West recycling supply chains to deliver recycled products to the Project. The knowledge gained informed a RCG Market Analysis Report. This current report builds on these previous activities.

The method employed included:

1. Confirming the scope of works.
2. Obtaining relevant documentation and contact lists.
3. Building on the findings of the RCG Market Analysis Report.
4. Engaging with key agencies including the Department of Water and Environmental Regulation (DWER), South West Regional Waste Group (SWRWG), Main Roads (MRWA), etc to identify issues, constraints, and opportunities.
5. International, national, local and supply chain investigations and discussions with key stakeholders to develop a suitable RCG specification for road related infrastructure within the Project.
6. Identifying suitable RCG source and processing suppliers interested in becoming parties to a Heads of Agreement (HoA), including role determinations and responsibilities of each party.
7. Working with HoA parties to ensure proposals are feasible and address the requirements of the Project.
8. Market testing through the conduct of an Expression of Interest process.
9. Independent confirmation of and sourcing of evidence in support of key undertakings made by suppliers in each proposal to the extent possible in an emerging market.
10. Development of a P90 estimate of the commercial rate ($/T) for RCG materials supplied to site (Bunbury, WA) based on tonnes available for the Project including costs for steps in the supply chain, such as supply chain infrastructure, processing plant and haulage to the Project site.
11. Sourcing data required to conduct a lifecycle cost, 'rapid' benefit cost and sensitivity analysis for RCG as per the ATAP Guidelines.
12. Identification and assessment of key risks associated with each proposal to supply RCG to the Project.

This work included a series of interactions with key stakeholders to address the scope of works.

1.4 Qualifications

The scope of works for this Business Case was developed over the course of several months. The following commercial and strategic factors have been identified as having a bearing on how the parties proceed:

1. The RCG specifications that suppliers were asked to quote on are referenced in this report.

2. Western Australian road industry demand for RCG is rapidly evolving, affecting certainty of demand for investors assessing the RCG business opportunity.
3. The South West market for glass lacks scale and has infrastructure gaps.
4. Transport distances to and from Perth and Adelaide from regional areas suggest processing glass into RCG in the South West and other regions may be viable when landfill diversion and regional economic factors are taken into consideration.
5. The timelines of the Project and those required to develop South West RCG infrastructure and facilities require a multi-pronged approach to ensure investments are effectively targeted.
6. The design of the BORR is continuing separately to the RCG business case process and the SWA Innovation Hub were not privy to any design information for the Project or SWGA design and construction considerations. The relevance of any SWA technical assessments or specifications relating to RCG as presented in this report is therefore uncertain and will require verification through validation activities.
7. Investment in facilities for RCG cannot be considered in isolation as investment in other recycling facilities, e.g., FOGO, have synergies and may strengthen the case for RCG if progressed together as part of a wider MRF facility.
8. The Business Case presented in this report has been structured based on glass being supplied by the Western Australian Return Recycle Renew (WARRRL) to the RCG processing facility through the container deposit scheme (CDS) and building the cost of plant and facilities into the tonnage rate.

Additional work on strategic scale value-for-money considerations, including the feasibility of co-investment by industry and Government in enabling infrastructure, would better inform how investment can be made in RCG trials to be undertaken in the *"Towards 100"* demonstration for the greatest benefit to the project, the sector, the South West and the State.

2 Background

2.1 Bunbury Outer Ring Road (BORR) Project

The Bunbury Outer Ring Road (BORR) project is a significant part of the Western Australian Recovery Plan for the South West. The $852M BORR project is proposed to consist of 27 km of four-lane highway connecting Forrest and Bussell Highways and 21 km of local government (LG) roads. This is one of the key components in the long-planned transport network for South West Western Australia.

The objective of the BORR is to produce the necessary road infrastructure to support the increased traffic between regional areas and reduce the impacts of vehicle movements on the local residential population. Additionally, the project aims to enhance sustainability outcomes for the infrastructure associated with the Project.

The BORR program has local government road construction commencing in late 2021 with completion of pavements scheduled for late 2023. Other infrastructure elements will largely come later.

The SWGA is tasked with the delivery of the BORR Project. SWGA has set a sustainability commitment to incorporate into the works 100% of waste glass from the Greater Bunbury area that is not currently being recycled and destined for landfill.

2.2 SWA and SWGA

The Sustainability Waste Alliance (SWA) is a collaboration of key agencies, working together across sectors and industries to achieve more than would otherwise be achieved in isolation. The SWA is focussed on driving innovative outcomes via the SWA Innovation Hub.

The SWA was established by the Office of Major Transport Infrastructure Delivery (OMTID) and key stakeholders to deliver on the commitment made to the Department of Water and Environmental Regulations (DWER) to identify additional specific opportunities for using recycled materials in upcoming major infrastructure projects starting with the BORR.

The South West Gateway Alliance (SWGA) is a Consortium of both owner and non-owner participants established by the State Government to deliver the BORR Project.

SWGA and SWA have agreed to work together through a leadership governance group to optimise the delivery of the six waste focus materials identified in the document "Recycle First Plan", December 2020, for the BORR Project whilst ensuring the achievement of regional and Aboriginal business and employment opportunities in the South West.

SWGA and SWA wish to identify innovative practices to maximise opportunities for resource management, resource recovery and recycling on BORR that will lead to better, value-for-money outcomes for the road and waste industries in Western Australia. The BORR project will become a model for:

- best practice in utilising applied road and waste recycling technology,
- engagement with Local Government to apply best practice in resource recovery and recycling of road project waste, and
- supply chain behavioural changes towards a 'Circular Waste Economy'.

2.3 Recycle First Plan for BORR

A Recycle First Plan (RFP) for BORR was produced by the SWA Innovation Hub for OMTID in December 2020 and was launched at the first SWA Summit in March 2021. The RFP is the first of its type in Western Australia and sets the fundamentals to commence actions on the BORR to fulfill the OMTID Recycle First Delivery Policy. OMTID has committed to identify specific opportunities for using recycled materials in upcoming major infrastructure projects starting with the BORR as agreed with DWER.

The Recycle First Plan sets an aspirational starting point of 100% reused or recycled materials in road construction, referred to as the "*Towards 100*" approach.

It is proposed to demonstrate a *Towards 100* outcome by using recycled and reused materials to the maximum extent possible over a 400-1,000 metre demonstration section of a BORR access road. The demonstration project will be additional to the other sustainability actions using recycled materials in other parts of the BORR. For the first time, several technical specifications and performance frameworks will be implemented together in parallel as a demonstration for advancing the fundamentals of the RFP and the real time development of new road products to other parts of the region and the state.

The *Towards 100* demonstration project presents an excellent opportunity to showcase innovative and sustainable RCG products that are presented in this report. It has the potential to drive genuine collaboration of the public, private and not-for-profit sectors to catalyse the Circular Economy in the South West and the State more widely.

2.4 Heads of Agreement– Recycled Crushed Glass

A Heads of Agreement (HoA) was developed to progress the development of a business case and a market led proposal. A copy of this executed HoA is included in Appendix G. The parties that are the signatories of this Agreement (signed 20 June 2021)are:

- WA Return Recycle Renew Ltd (**WARRRL**)
- South West Gateway Alliance (**SWGA**)
- Sustainability Waste Alliance (**SWA**)
- Bunbury Harvey Regional Council (**BHRC**)

3 RCG Processing and Approval Considerations

3.1 Energy and Carbon

3.1.1 Embodied Energy

A 1994 jointly authored technical paper produced by the United States Government's Argonne and National Renewable Energy Labs considered all the energy inputs to glass from virgin materials versus recycled materials and found a 13% overall efficiency from incorporating recycled glass into new glass products. The report determined that this energy savings is lost if the glass is transported more than 100 miles (160 km). The key factors identified were virgin material extraction and transport energy and the energy inputs to achieve the higher temperature required to manufacture glass from virgin materials. These were compared with the high energy inputs of processing and transporting glass cullet, and the average losses due to contamination in recycled glass cullet (very small amounts will ruin a batch). The intervening period will have seen significant processing technology improvements. The cost of energy has also risen over this period.

At face value, it seems unlikely that the overall efficiency has improved 20-fold over the intervening period to account for the transport energy and cost factors associated with shipping RCG from across WA to Perth and then on to Adelaide for final processing into recycled glass products. Additional due diligence is suggested to confirm this assessment. That is outside the current scope of work of this project and is one of the many criteria that will be possible to evaluate as part of the "Towards 100" demonstration project by the SWA Innovation Hub.

3.1.2 Carbon Emissions

The South Australian Government calculated that road freight emits an average of 74 grams of carbon per tonne kilometre. This amounts to 693 tonnes of carbon emissions for 10,000 tonnes of glass shipped to Adelaide.

3.2 Process Overview

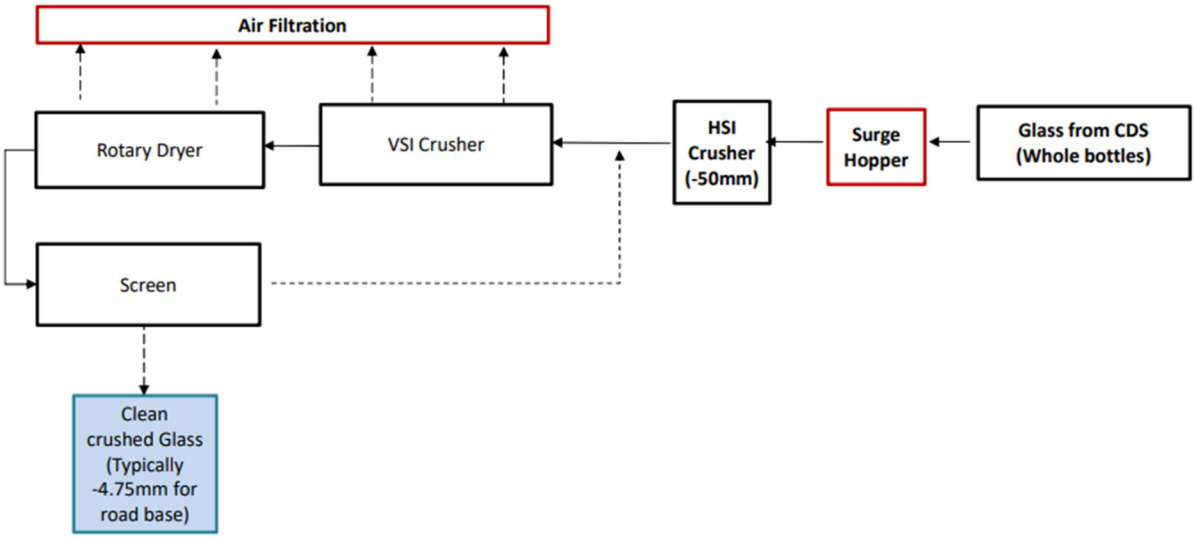

Figure 1: RCG processing flow diagram

Producing recycled crushed glass (RCG) involves:

1. An input stockpile,
2. A front-end loader to transfer glass into the surge hopper and load trucks taking product to site,
3. A surge hopper to ensure continuous supply,
4. A horizontal shaft input (HSI) crusher,
5. A vertical shaft input (VSI) crusher,
6. A dryer to cook of sugars and dry paper,
7. A screening to filter oversize materials to remove paper and plastic,
8. A return conveyor to reprocess oversized materials, and
9. An output stockpile.

Figure 2: RCG Processing plant configured to meet specifications

The processing and input stockpiles require a large shed to control moisture and other contaminants. The output stockpile can be outside on a concrete pad or inside the processing shed. Glass delivery and RCG pick-up require access roads to each stockpile.

3.3 Glass Sources

3.3.1 RCG Processing in Bunbury

The recommended source for an RCG processing facility in Bunbury is glass drink bottles recycled through the Container Deposit Scheme (CDS). This source is lower in contamination compared to glass sourced from a materials recovery facility (MRF) /

municipal waste. This improves the quality of processing as well as the ability to produce RCG to the required specifications.

WARRRL have advised that should an investment be made in an RCG facility in the South West that CDS bottles from the South West would be aggregated in Bunbury instead of being transported to Perth for processing. The transport savings enables WARRRL to efficiently supply glass at no up-front cost (to be processed into RCG) to an RCG operator at a subsidised rate, initially offered as a rebate of $XXX/metric tonne.

3.3.2 RCG from Perth for a Pilot/Demonstration "Towards 100" Project

The supply of a smaller volume of RCG produced in Perth can be undertaken to confirm performance characteristics on the BORR. This glass can be potentially supplied either by WARRRL (CDS glass currently bound for Adelaide) or Perth Bin Hire (sourced from two Perth material recovery facilities and crushed in Perth).[1] Glass sourced from either supplier in Perth is either sourced from Perth (Perth Bin Hire) or aggregated with glass from across the State (Waglass). It is possible that the supply of glass in Perth for this purpose can be cross-referenced to the supply of glass generated from the South West to deliver upon the SWGA sustainability commitments for glass.

3.4 Stockpiling

3.4.1 Input Stockpile

Stockpiling glass beyond an amount required to ensure continuous production is not recommended. The sugars in glass ferment and make it next to impossible to achieve a quality RCG product at any specification. A 150 MT stockpile is considered adequate to ensure continuous operation for the scale of facility proposed. Hook-lift bins are an alternative to this approach, but the capital investment saved in the short term would outweigh the benefits in the longer term.

3.4.2 Processed RCG Stockpile

RCG can be stored once processed. A 150-300 MT stockpile for storage at the RCG processing facility prior to transport to the BORR project is deemed adequate. Hook-lift bins are an alternative for a short-term operation but will add significant cost in the longer term.

3.4.3 BORR RCG Stockpile

If this business case is supported, it is recommended that the BORR establish a 500 MT stockpile onsite to facilitate adequate supply to meet road infrastructure building requirements.

3.5 Key processing considerations

The recommended economic scale of RCG processing equipment will generate approximately 800 MT per month on a single shift. A smaller facility will not reduce costs appreciably.

[1] Perth Bin Hire has stated that they cannot currently supply RCG to the specification.

The key considerations when utilising RCG in road related infrastructure are:

- Ensuring that glass sourced from bottles is crushed to under 6 mm to avoid laminar shapes that have sharp edges, compaction issues, too much paper contamination, rebreaking and impaired drainage.
- Removing sugars is important to reduce odours during civil works. This can be achieved adequately by heating to 70-80 degrees centigrade. The alternative is washing the glass, which achieves a cleaner product, but adds waste water treatment to the cost of the plant. Washing is considered excessive for RCG applications in road related infrastructure.

  For comparative purposes, the contamination of RCG can be rated on a scale of 1-10, with 10 as the highest rating. Using this scale, the sugar contamination in the MRF glass used in the Northlink project rated a 2/10, processing CDS glass without heating would rate a 5/10, and processing CDS glass with heating would rate an 8/10.
- CDS glass typically has 2% paper contamination by volume. Removing paper is critical, particularly for unblended drainage applications. Experience in the eastern States indicates that the performance of unblended RCG drainage applications is impacted where there is more than 0.5% paper contamination. This requirement is considered to be readily achievable with the type of plant being proposed.

3.6 Building Requirements

A 1200 m^2 x 8 m tall shed is considered adequate to house the input and output stockpiles for RCG, ancillary storage and RCG processing equipment. The site configuration and access points will determine the footprint of entry and exit haul roads. A portable office can accommodate administrative and kitchen requirements, if not available at a shared site.

3.7 Operations

3.7.1 Operators

RCG plant requires two operators with the skills to monitor plant functions and drive a front-end loader to load the input hopper and trucks transporting RCG to the BORR and other local road projects. The plant can run independently between regular reloading and equipment check intervals. The operation would benefit from being co-located with other similar operations, e.g., FOGO, to ensure operators have alternative tasks across other operations to make effective use of their time.

The wage estimate for operators with the required skills is $25-30/hour before oncosts or approximately $25/tonne. This needs to be adjusted to the average wage across the site, if co-located with other operations where job sharing makes operational and economic sense (e.g., BHRC).

3.7.2 Power and Materials Inputs

A 400-amp power supply is required for the facility. With ancillary materials and inputs these ongoing costs have been estimated at approximately $15/tonne.

3.8 Timeframes for Construction and Approvals

Gaining approvals for an RCG operation in the South West is considered relatively straightforward but time consuming. Procedural delays are the main risk. A 6 month site and plant construction timeframe from the date of approval has been estimated, excluding a two-week running in period. Approvals could equally take up to 6 months. This timeframe can be significantly reduced provided the site selected has the required planning permissions already in place such as is the case with the BHRC Stanley Road site.

4 RCG Specifications

4.1 Requirements

The increasing interest to limit the use of natural resources and to reduce waste volume sent to landfill is encouraging innovative ways to recycle and reuse waste materials such as recycled crush glass.

The SWGA Project Brief requirements stipulate the development of specifications pertaining to the application of RCG to the pavement layer of local government roads, including:

- a program to develop, test and obtain approvals;
- assess local industry capability, supply chain and infrastructure gaps and timeframes required to develop new facilities;
- explore the viability of blending crushed rock and glass to achieve MRWA 501 basecourse specification;
- Investigate the viability of achieving Roads to Reuse (RtR) specification (March 2021) contamination requirements and sufficiently eliminating odours;
- focus on glass sourced from food and beverage containers and building or window glass (no glass classified as hazardous waste).

The Project Brief indicates that other road applications may also be considered for trials. For this reason, a range of applications were considered.

4.2 Application of Recycled Crushed Glass (RCG) in Road Pavements

The engineering properties of RCG (smaller size at 4.75mm) are very similar to natural aggregates. Various studies suggest that these characteristics of RCG can be used for many applications including base course, sub-base, embankment, etc. According to the Australian Soil Classification System (ASCS), recycled glass is classified as a well-graded silt (fine sand). The specific gravity of recycled glass particles is within the range of 2.41-2.54mm which is lower than the typical values of most soils. While material such as crushed rock is classified as poorly graded gravel mixed with silt.

In the USA, the FHWA recommends that the use of RCG in granular base course should be as a replacement for fine aggregate sizes considering that fine glass includes durable particles similar to sand. FHWA propose using a maximum of 15% and 30% of RCG by weight in base and sub-base courses.

A study done in Victoria on the suitability of using blends of RCG and crushed rock as road pavement sub-base materials with mixtures of 10-50% by mass of recycled glass showed that up to 15% recycled glass with maximum particle size of 4.75mm could be safely added to Class 3 crushed rock. A field and laboratory evaluation on the performance of RCG in these pavement base/subbases, showed that RCG blends with crushed rock are suitable for subbase applications and are a viable additive when used in limited proportions with other recycled aggregates in pavement subbases. However, RCG blends with crushed rock may not fully meet specified requirements as a pavement base material.

Lockhart Shire Council in NSW has been reported to blend up 10-15% of RCG with gravel for road base. This has reduced their stockpiles of crushed glass, reduced the quantity of virgin material being used, and extended the life of local quarries. This is also a more environmentally sustainable approach. The road being trialled with RCG has performed well

and shows no major defects. Other local governments such as the City of Salisbury in South Australia have also been trialling the product.

A draft specification for RCG titled 'Recycled Crushed Glass as a Construction Material Specification 501-93 (draft version) was prepared to complement Main Roads Specification (501) requirements relating to the supply and handling of RCG as a construction material. This draft specification was developed to inform our discussions with Main Roads Materials Engineering Branch (MEB), as an input to an Expression of Interest process with potential suppliers, and to satisfy the project requirements. A copy of the draft specification (see Figure 3) can be supplied on request by the SWA Innovation Hub.

The document was drafted in such a way to specify the application of RCG:

- as an additive to crushed rock to achieve MRWA 501 basecourse specification,
- to be used in a drainage layer, and
- in accordance with OMTID's Recycle First Policy.

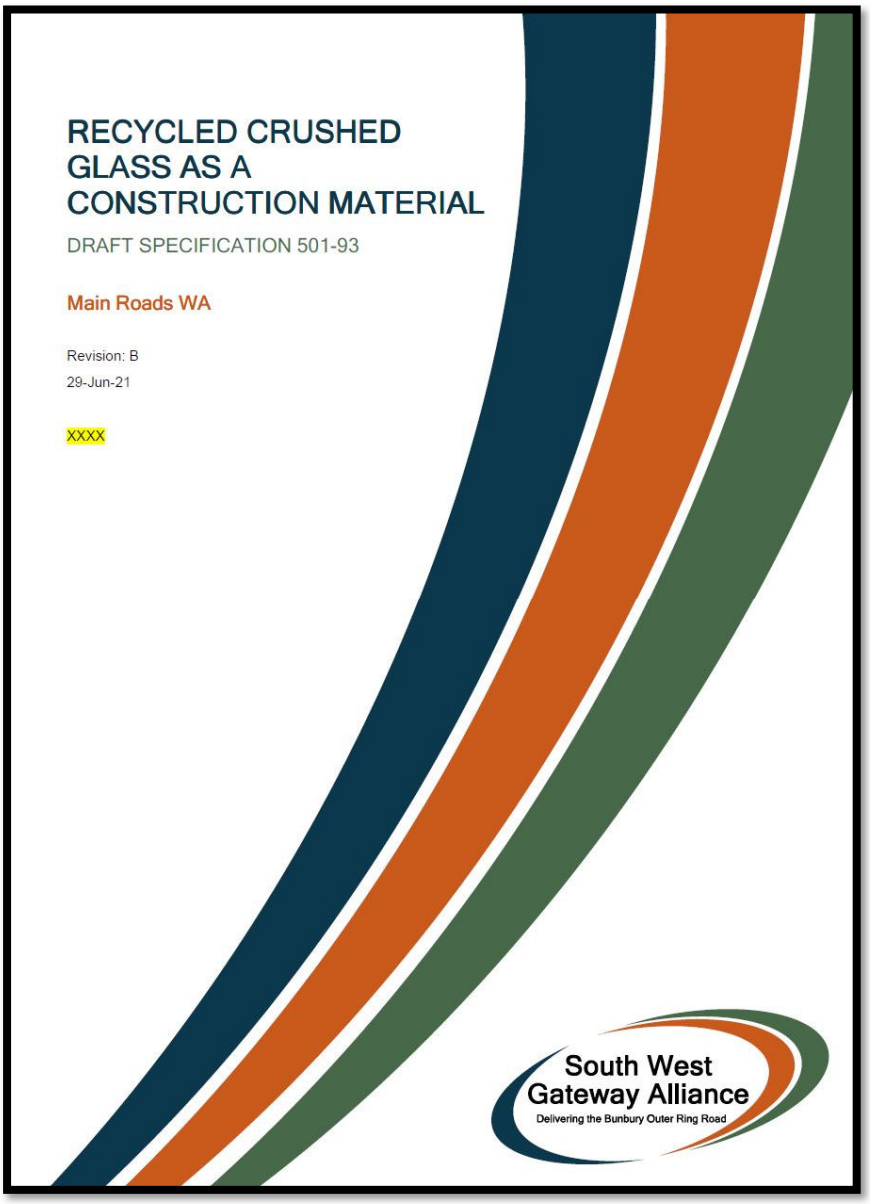

Figure 3: Cover of Draft RCG Specification

Recent interactions with MEB have indicated that blending RCG into road base and sub-base is not supported. Their view is that the embodied energy and carbon footprint involved in carting the material to be processed and then transferring it to site and blending it will be costly and it will outweigh the environmental sustainability benefits of using the material in this application. This position was substantiated elsewhere through wider consultation with industry experts. The preferred method of use is to apply it as an unblended drainage or embankment layer.

It is our recommendation that RCG be explored in non-blended applications in the BORR project initially as part of the *"Towards 100"* demonstration project rather than as a blended pavement product. These other non-blended applications for the use of RCG on the BORR were investigated and are discussed in the following sections of this report.

4.3 Application of Recycled Crushed Glass (RCG) in Shared Paths

A few Local Governments outside of Western Australia have used RCG for shared paths and foot paths - to name a few: Salisbury Council (South Australia), Lockhart Shire Council (NSW), Wyndham City Council (Victoria) and Manningham Council (Victoria).

Some of the common goals shared by these local governments is to reduce their large stockpiles of crushed glass that are not being used, cut down on the use of virgin materials and to recycle glass destined for landfill. So far the performance of RCG used in this application has been reported positively.

The construction process of shared paths with the addition and blending of crushed glass with gravel is similar to existing road making practice. Therefore, the standard MRWA specification 501 for road sub-base may be adopted for this application.

4.4 Application of Recycled Crushed Glass (RCG) as a Drainage Layer

Recycled crushed glass has many potential benefits in terms of geotechnical and drainage applications. The list below shows some of the engineering properties of RCG that may contribute to the performance of pavement structures:

- Shear strength – studies have shown that there is a lack of cohesion in RCG, thereby affecting shear strength. To overcome this, different proportions of RCG and crushed rock can be mixed to examine their geotechnical characteristics
- Resilient modulus – the resilient modulus of a RCG and crush rock blend was found to be comparable with those of natural granular sub-base
- Hydraulic conductivity – drainage properties of aggregates are important parameters in pavement design. RCG was found to have good drainage in base and sub base compared to natural aggregate as it possesses higher values of void ratio, porosity and hydraulic conductivity
- Moisture density – the trend of RCG is similar to that of natural aggregates with slight differences in its shape indicating less sensitivity of recycled glass particle compaction to moisture content

From the characteristics above, crushed glass has been found to work well as a pavement drainage layer due to its improved permeability and compaction, resistance to the absorption of water (unlike sand), and because it is a relatively inert material.

Gradings for RCG used as a drainage layer have been provided in the 'Recycled Crushed Glass as a Construction Material Specification 501-93 (draft version)'. This is further

elaborated upon in Section 4.2 and will be tested in the "Towards 100" demonstration project as a 'capillary rise' drainage blanket.

4.5 Other applications

Recycled crushed glass has good potential to be used as a replacement for virgin sand for applications such as pipe bedding.

Recycled crushed glass also has the potential to be used as a decorative feature on noise walls, foot paths, and concrete paving.

Besides becoming a decorative additive, crushed glass has noise absorbing ability. The small, aerated granules made from recycled glass can be fused together to form a stone like noise absorbing panel or noise barriers (see Figure 4).

The triple-bottom-line desirability of using RCG in these applications in the BORR needs to be further evaluated based on its high embedded energy, water consumption and cost. The proposed *Towards 100* pilot project will be an ideal opportunity to explore these RCG applications in low quantities in a low risk environment.

Figure 4: Noise wall

4.6 Other Factors

One of the primary obstacles in reusing recycled glass is the presence of different coloured glass and diverse types of debris. The quality of the RCG, especially the volume of debris, is dependent on the waste stream from which the glass bottles have been produced. The gradation curve and amount of foreign material in the recycled glass is partly determined by the type of machinery and procedures used in crushing and sieving waste glass. Therefore, the engineering behaviour of recycled glass varies from one supplier to another; leading to varying results for tests on the geotechnical characteristics of recycled glass studied around the world. The proposed method of delivery, and the sourcing of CDS glass material from WARRRL, provides a level of mitigation of these factors for the BORR project.

5 Pricing Basis

Targeted "market testing" has occurred through an Expression of Interest (EoI) process. Formal responses were received via WARRRL from Cleanaway and Waglass (shown in APPENDIX H:). The information provided has been used to inform the Business Case process. A detailed analysis of the pricing inputs is shown in this section.

5.1 Cost of RCG Production

The pricing tables provided by Cleanaway and Waglass are shown in APPENDIX A: and APPENDIX B:. A comparative analysis (see Table 1) has been prepared to identify and discuss the points of differences between these two quotations.

This Business Case has been developed based on an assumption that a total of 25,000 tonnes of RCG will be processed over a total continuous period of five years.

REDACTED

Table 1: Comparative table on quotes provided by glass suppliers

5.2 Other RCG Costs

The transport cost from Perth to BORR is estimated to be approximately $30/tonne. Indicative transport costs from the proposed RCG facilities in Bunbury and Kemerton to the BORR sites has been estimated at approximately $10/tonne.

It has been assumed that any RCG blending that is required will occur through a mobile pugmill on site. A pugmill is able to mix the RCG with gravel or other materials and, at the same time add water to the mix during the blending process. The blending cost is estimated to be approximately $15/tonne. Additional information on the blending cost can be found in APPENDIX J:.

An allowance of 15% of the capital costs has been included for design, investigation, approvals and project management inputs, and 10% for ancillary construction requirements.

According to 'Guidance Note 3B – Deterministic Contingency Estimation (2018)' issued by the Department of Infrastructure, Regional Development and Cities, a contingency of 30% on CAPEX is suggested for road projects to achieve a P90 estimate (a 90% confidence of not being exceeded). A 5% on Opex elements has also been assumed.

The pricing shown in Table 1 does not include:

Capex related items:

- Ancillary construction costs (e.g., environmental works, traffic management, temporary works, and etc.)
- Design, investigation and approval costs
- Project management costs
- Contingencies

Opex related items:

- Legal, insurance and related costs
- Transport costs
- Blending costs
- Contingencies

These other costs are estimated at $XXX/tonne for blended product and $XXX/tonne if blending is not required. This includes a contingency of $XXX/tonne.

5.3 Total RCG Supply Cost

The total cost of RCG per tonne for use in the BORR and other SW road projects, depending on whether it is required to be blended or not, is estimated at between $XXX and $XXX per tonne.

This cost of RCG is significantly higher than that presented in the RCG Market Analysis report, which highlights that suppliers significantly underestimated and excluded many costs at that time that have now been identified through this business case and P90 development process.

The total RCG supply cost includes $XXX/tonne for Capex related items and $XXX/tonne for Opex related items. So once full recovery of the CAPEX related items occurs then the

ongoing cost (excluding maintenance) would be expected to reduce to level of the Opex related cost items.

5.4 Evaluation of Costs

A detailed evaluation of the quoted costs is given below:

- *Redacted*
- *Redacted*
- Without the cost for a new warehouse facility, the total cost presented by both suppliers is within the margin of 3% of one another, i.e. they are very close.
- A long-term offtake agreement of 5 years or more at a fixed price with a minimum of 25,000 tonnes of RCG produced will be essential to a viable RCG operation in the South West.
- The full estimate of the capital cost of the RCG facility is estimated at approximately $4.5M. This includes allowance for $3M for the facility and $1.5M for design, investigation, project management and approval costs, ancillary construction costs and contingencies.
- In order to make this project more feasible, external funding of $3 Million or more will be needed to support the required capital investment.
- *Redacted*
- This project is built on the commitment of identifying sustainable opportunities and delivering 100% recycled materials in a major infrastructure with government agencies and SWGA on behalf of Main Roads taking leadership to deliver this promise in accordance with OMTID's Recycle First Policy including the "*Towards 100*" approach. The environmental benefits and opportunities (such as employment, innovation and what is best practice) arguably offsets some of the price of using RCG relative to what is 'business as usual' practice.
- Once a preferred option has been agreed by the HoA signatories then efficiencies of scale and other wider cost benefits can be explored and included in any final binding offtake agreements.

6 Benefit Evaluation

6.1 Balanced Scorecard

A Balanced Scorecard (shown in APPENDIX E:) was used to evaluate four different options. These options are:

- Option 1: Building a RCG processing facility by Waglass at the BHRC site at Stanley Road with glass supplied by WARRRL for use in the BORR project and other future road projects in the South West.
- Option 2: Building a RCG processing facility by Cleanaway at its Dardanup site with glass supplied by WARRRL and Cleanaway's Albany Materials Recovery Facility for use in the BORR project and other future road projects in South West.
- Option 3: Building a Material Recovery and RCG processing facility by BHRC at its Stanley Road site with glass supplied by South West yellow top bins and WARRRL to produce RCG for use in the BORR project and other future road projects in South West.
- Option 4: RCG to be supplied from Perth for a trial in the BORR project to demonstrate value and viability of RCG.

A summary analysis of the balanced scorecard evaluation is shown in Table 2.

Focus Areas:	Option 1:	Option 2:	Option 3:	Option 4:
	RCG plant at BHRC	RCG plant at Cleanaway Dardanup	MRF and RCG plant at BHRC	Transport RCG from Perth
Policy	2	2	1	4
Economy	2	2	1	4
Technology (Infrastructure)	2	2	1	4
Environment	3	2	1	4
Legislation	3	2	1	4
Stakeholders (Community)	3	2	1	4

Green – highest benefit
Light Green – significant benefit
Amber – moderate benefit
Red – limited benefit

Table 2: Sensitivity Analysis

As shown from the scoring, the highest ranked option is to build a MRF and RCG processing facility by BHRC at their Stanley Road site. The business nature and strategic role played by BHRC in the South West region as a waste management facility is the most befitting compared to the other options.

Aggregating and processing CDS bottles from South West within its region itself is a more sensible and sustainable method than transporting the waste material to Perth for processing. There is significant savings in transport and in carbon footprint.

Option 4 scored the lowest ranking because this would only be used for a trial or pilot project for a small volume of RCG to be tested on BORR to confirm performance characteristics. However, the idea of an RCG trial on a cross section of road at the BORR has been found to fit in well with the *Towards 100* pilot project[2] which has been adopted by OMTID. Hence, a request for quotation was made to Waglass for a sample glass size of 500 tonnes to be transported from Perth to BORR for the pilot project. The estimated cost is $XXX/tonne excluding transportation cost (refer APPENDIX I:). This is lower than if it were to be produced in the South West at the proposed volumes.

6.2 ATAP Sensitivity Analysis

The Australian Transport Assessment and Planning (ATAP) guidelines provide a comprehensive framework for planning, assessing and developing transport system and related initiatives.

The benefit cost analysis (BCA) conducted under the ATAP framework includes a simple sensitivity analysis. The sensitivity test is a simple way to analyse the uncertainty surrounding the BCA results. While this helpful it is emphasised that this simple tool has limitations.

The sensitivity variables and ranges for road initiatives (see Table 3) as recommended by Austroads were taken into consideration in the BCA analysis for RCG.

[2] Towards 100 is an aspirational philosophy of using 100% recycled materials for road construction

VARIABLE	SUGGESTED MINIMUM VALUE	SUGGESTED MAXIMUM VALUE
Capital cost[a] Concept estimate Detailed costing Final costing	–20% of estimate –15% of estimate –10% of estimate	+20% to 35% of estimate[b] +15% to 25% of estimate[b] +10% to 20% of estimate[b]
Road-agency operating and maintenance costs	–10% of estimate	+10% of estimate
Traffic Total traffic volume (AADT) Proportion heavy vehicles Average car occupancy Traffic growth rate Traffic generated by specific (uncertain) developments Traffic diverted or generated by the initiative Traffic speed changes Changes in crash rates	–10% to –20% of estimate –5 percentage points –0.3 from estimate –2% pa (absolute) from the forecast rate Zero – 50% of estimate –25% of estimated change in speed –50% of estimated change	+10% to +20% of estimate +5 percentage points +0.3 from estimate +2% pa (absolute) to the forecast rate As forecast +50% of estimate +25% of estimated change in speed +50% of estimated change

Table 3: Sensitivity variables and ranges recommended by Austroads [3]

Notes:

a. The appropriate range for capital costs depends on the level of investigations, design and costings. The concept estimate relates to initial pre-feasibility or sketch-planning estimates. The final costing relates to estimates after the final design stages.

b. The range of values relates to different types of initiative. Costing for more routine initiatives (e.g., road shape correction, resealing) are generally more accurate than those for larger initiatives (e.g., new motorway construction).

As part of the process, interviews with relevant stakeholders were conducted and the consolidated response is shown in Appendix D, and a risk and opportunity register is given in Appendix E.

[3] Austroads 1996, Benefit-Cost Analysis Manual, Austroads, Sydney

6.3 Benefit Cost Analysis

A benefit cost analysis was conducted in line with the Infrastructure Australia guidelines. Important information that has been considered in the benefit cost analysis include:

- an evaluation period of 30 years
- P90 risk premium/contingency (Capex cost) at 30%
- P90 risk premium/contingency (Opex cost) at 5%
- A discount rate of 7% with sensitivity analysis at 4% and 10%

It should be noted that a number of other costs presented in Section 5.2 were unable to be included in this analysis. This is likely to mean that the benefit cost ratios quoted are overstated by 10% or more should those costs not be adequately covered by the nominated contingencies.

Likewise, wider economic benefits outside the Project were not included in this assessment e.g., job creation. These benefits can be considered by government and other co-investors to suit their particular objectives / regional goals. For example, negotiations are currently underway between the Infrastructure Sustainability Council of Australia (ISCA), the Commonwealth Government and SWA to this end.

Three scenarios were considered in the analysis:

- Scenario 1 – an Opex subsidy of $40/tonne plus $100,000 investment in CAPEX per year (total of $3M over 30 years)
- Scenario 2 – an Opex subsidy of $20/tonne plus $100,000 investment in CAPEX per year (total of $3M over 30 years)
- Scenario 3 – an Opex subsidy of $100/tonne plus $100,000 investment in CAPEX per year (total of $3M over 30 years).

Scenario 1: $40 Opex subsidy (Cleanaway)		
PVB	Present Value Benefit	$5,822,115
PVC	Present Value Cost	$5,715,115
NPV = PVB-PVC	Net Present Value	$107,000
BCR=PVB/PVC	Benefit Cost Ratio	1.02
Scenario 2: $20 Opex subsidy (Cleanaway)		
PVB	Present Value Benefit	$4,595,115
PVC	Present Value Cost	$5,715,115
NPV = PVB-PVC	Net Present Value	-$1,120,000
BCR=PVB/PVC	Benefit Cost Ratio	0.80

Scenario 1: $40 Opex subsidy (Waglass)		
PVB	Present Value Benefit	$5,822,115
PVC	Present Value Cost	$5,550,750
NPV = PVB-PVC	Net Present Value	$271,365
BCR=PVB/PVC	Benefit Cost Ratio	1.05
Scenario 2: $40 Opex subsidy (Waglass)		
PVB	Present Value Benefit	$4,595,115
PVC	Present Value Cost	$5,550,750
NPV = PVB-PVC	Net Present Value	-$955,635
BCR=PVB/PVC	Benefit Cost Ratio	0.83

Table 4: Benefit Cost Ratio

The benefit cost analysis shows that a subsidy of no less than $40/tonne with external funding sufficient to fully subsidise the CAPEX requirements of the project needs to be obtained in order to generate a BCR of 1.0.

Scenario 3, not presented in Table 4, estimates a much more significant Opex saving. Although the benefit cost ratio generated is healthy and close to 2, further investigation is recommended to ascertain mechanisms to achieve this number including the consideration of other 'true costs' currently being borne by the supply chain.

6.4 P90 Estimate

A P90 represents the project cost with sufficient funding to provide a 90% level of confidence in the outcome; there is a 90% likelihood that the final project cost will not exceed the funding provided. In other words, it represents a funding allocation that has only a 10% change of being exceeded[4]. To ensure that the cost estimate will not be exceeded, a contingency (~ 30%) is incorporated in P90.

The P90 estimate of the commercial rate for RCG to be supplied to Bunbury of $XXX to $XXX per tonne is based on the following:

- 5,000 tonnes/year available for the project
- A pay-back period on the capital of 5 years.
- costs for the different elements of the supply chain including:
  - existing CDS logistics, infrastructure and equipment, and contracts with WARRRL
  - processing and stockpiling warehouses/sheds
  - processing plant

[4] Definition from Guidance Note 3B Deterministic Contingency Estimation by the Department of Infrastructure, Regional Development and Cities

6.5 Timing

6.5.1 Time to achieve approvals for crushing facility

The proposed glass crushing facility will be in the greater Bunbury area. The biggest risk factor associated to this facility lies with its approval times. Multiple levels of approvals are required from various agencies and departments simultaneously. This can have a significant impact on the project timeframes if there are issues with the application process.

Some of the approvals include but not limited to:

- Building approval from relevant local government (minimum of 6 weeks)
  - building and infrastructure – shed approximately 100m x 75m
- Development approval from relevant local government (minimum 6 weeks)
  - approval related to whole of project cycle
  - approval from WA Department of Planning, Lands and Heritage may be required
- BHRC License amendment – DWER (minimum 6 weeks)
  - glass crushing
  - sales – as per specification requirements
  - storage – *not required*
  - clearing – *not required*

The lead time indicated by both suppliers for the establishment of the crushing facility post approvals is approximately 6 months.

6.5.2 Project timeframe

The table below shows the timeframe for key milestones:

Events	Estimated Timeframe / Duration
Funding application and approval	12-20 weeks
Development approval	6 weeks
Building approval	6 weeks
BHRC license amendment	6 weeks
Building and testing RCG processing facility	24 weeks
Testing and auditing for approval	4 weeks
Placement of RCG in trial section at BORR	Date to be confirmed
Total	52+ weeks

Table 5: Forecast project timeframe

A 12 month time period or more for construction and site approvals has been estimated assuming a BOOT or similar approach. This is following a Business Case being approved and grant funding or market financing being secured. This time period takes the commencement of any RCG facility well beyond the initial period of RCG demand on the BORR project.

7 Market Development and Funding

7.1 Market Led Proposal to Government

The proposals received from WARRRL and suppliers and independent assessment provided through this Business Case substantially meet the requirements of a Market Led Proposal.

The 'uniqueness' criterion is seemingly satisfied by the absence of RCG processing in the South West and the difficult to replicate competitive advantages of WARRRL to deliver a public service through subsidising the supply of uncontaminated Container Deposit Scheme glass for RCG processing in regional areas.

Value for money calculations will turn on demonstrating a positive benefit-cost ratio based on the following factors:

- the high carbon and financial costs of transporting CDS glass to Perth and then Adelaide for processing into bottles,
- the potential to establish a material sorting facility (MRF) in the South West to expand the supply of glass for RCG processing – the preliminary understanding of this value will need to be confirmed before it can be incorporated,
- the scalability and replicability of this approach in other regional areas,
- the value of new RCG applications in roads across the State – this value will need to be confirmed before it can be incorporated,
- new glass products being identified or developed through the SWA Innovation Hub to accelerate uptake,
- market development strategies being progressed including incubating emerging markets in the South West and more widely throughout the State.
- the value of circular economy investments and jobs created through establishing a MRF and RCG processing facility in the Bunbury area.

The Market Led Proposal assessment process is staged to ensure the time and investment by government and proponents are proportionate to the likelihood of success. This business case is ample information for a first stage assessment to determine government interest in procuring regional RCG processing.

7.2 Government Grants

There are Western Australian and Federal grants available to support investment in glass sorting and processing facilities. This also applies to larger materials recovery facilities, that are able to process more than one waste stream.

Applicable government grants include:

- WasteSorted – these grants have traditionally been too small to be relevant to this project. The 2019-20 round of funding spread $1.6 million across 13 projects. The 2021-22 round is currently open.
- Regional Economic Development (RED) grants – the next round has not been announced.

- The Manufacturing Modernisation Fund – Round 2 has closed and Round 3 is scheduled for the first half of 2022.
- Special grants that can be sourced in the WA Recovery Plan of the State Government including waste infrastructure funding recently announced by the Environment Minister.

7.3 Private Sector Investment

Approaches have been made to Cleanaway and Waglass to underwrite the capital and amortise the investment over the life of the facility or a minimum of 5 years….*Redacted*

8 Major Findings

The major findings from this Business Case for RCG are as follows:

1. It has been confirmed that the maximum amount of glass that can be reliably sourced from WARRRL is 10,000 tonnes over 2 years. No commitments for any other substantial volumes of glass in the South West have been identified.

2. The cost of RCG presented in the RCG Market Analysis report was significantly underestimated by suppliers and excluded many costs identified through this Business Case and P90 development process.

3. The P90 cost of RCG over a five year pay-back period for a South West based facility is estimated to be between $XXX and $XXX per tonne. This price includes contingencies as well as some allowance for other fees and charges such as insurance, transport costs, etc. The higher of the two costs allows for blending of the material on site at the BORR.

4. The cost of purchasing and transporting RCG from Perth will be lower than if it were to be produced in the South West at the proposed volumes (5,000 tonnes per annum). The transport of a limited quantity of RCG from Perth should be supported for the *Towards 100* pilot project.

5. Although Option 4: RCG supplied from Perth for a trial/pilot in the BORR project, turned out to be the lowest ranked option in terms of policy outcomes, this option aligns well with the *Towards 100* pilot program, and would be a sensible and low risk first step.

6. The outcome of the Balance Scorecard evaluation reveals Option 3 as the preferred option I.e., BHRC building a material recovery and RCG processing facility at its Stanley Road site with glass supplied by South West yellow top bins and WARRRL to produce RCG for use in BORR and other future road projects in the South West. Should funding co-investment from government or funding/financing from the private sector be secured then this preferred option should be progressed further.

7. The full estimate of the capital cost of the RCG facility is estimated at approximately $4.5M. This includes allowance for $3M for the facility and $1.5M for design, investigation, project management and approval costs, ancillary construction costs and contingencies.

8. The outcome from the benefit cost analysis reveals:

    a. A funding source of $100k/pa ($3M over 30 years) and $40/tonne Opex subsidy for 30 years yield a BCR of 1.

    b. A funding source of $100k/pa ($3M over 30 years) and $20/tonne Opex subsidy for 30 years yield a BCR of 0.8.

9. A long-term Offtake Agreement of 5 years or more at a fixed price with a minimum of 25,000 tonnes of RCG produced will be essential to a viable RCG operation in the South West.

10. In order to make this project more feasible, external funding of $3 Million or more will be needed to support the required capital investment in a South West based RCG facility in order to make this project feasible. A condition of this approach of a two job legacy for Aboriginal and Torres Strait Islander business development/regional employment should be considered.

11. Even if the above funding for capital is secured, a significant Opex subsidy beyond the current WARRRL offer is required to justify the difference in the price of RCG and virgin material.

12. A 12 month time period for construction and site approvals has been estimated assuming a BOOT or similar approach. This is following a Business Case being approved and grant funding or market financing being secured. This time period takes the commencement of any RCG facility beyond the initial period of RCG demand on the BORR project as identified in the current schedule.

9 Next Steps

The next steps in the process are recommended as follows:

1. The HoA signatories to consider the major findings of this report prior to meeting to decide further action towards a workable solution.
2. The HoA signatories to further explore mechanisms to secure external funding and financing for the capital related elements of any processing facility.
3. The HoA signatories to enter legal and commercial negotiations to progress the preferred option (Option 3).
4. The timeline in the HoA should be amended to reflect the control dates in the Risk and Opportunity Register in Appendix E.
5. RCG to be procured for use in the '*Towards 100*' demonstration project.

APPENDIX A: WARRRL – Waglass Proposal Details

REDACTED

APPENDIX B: WARRRL – Cleanaway Proposal Details

REDACTED

APPENDIX C: BHRC Glass Crushing Location

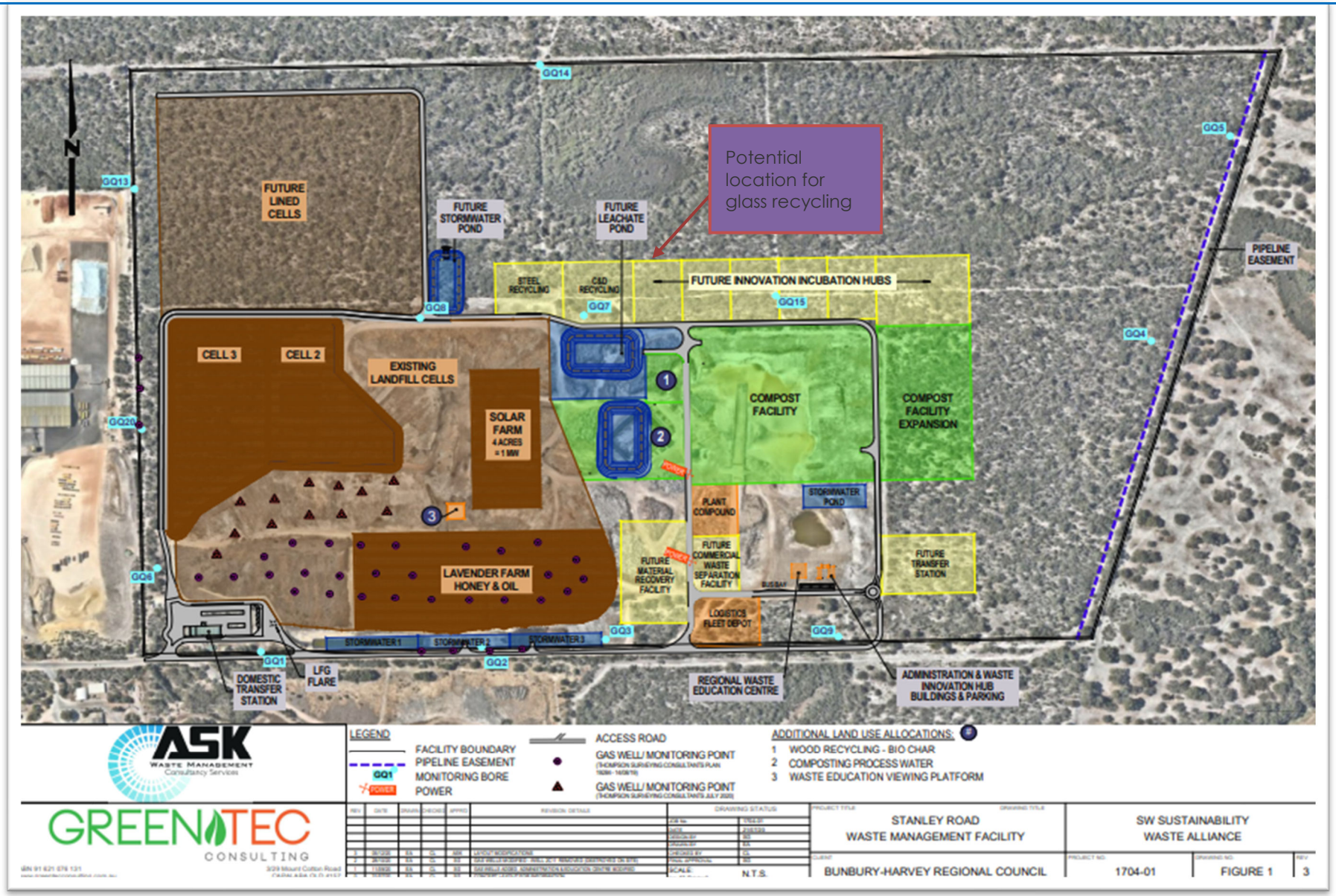

APPENDIX D: ATAP Stakeholder Consultation

1) List the key stakeholders and indicate the degree of consultation that has taken place to date and the level of support received.

The Heads of Agreement in the Appendices sets out the terms and conditions for contribution to the development of the RCG Opportunity – Business Case. A detailed negotiation preceded signing of this agreement by each party.

2) What stakeholder sign-offs are required?

An Expressions of Interest process was conducted based on the terms and conditions agreed to through the Heads of Agreement. This document is provided in full in the Appendices.

3) What potential exists for part, or full, private sector funding of the initiative?

There are two options, based on the responses received to the Expressions of Interest process:

a) WARRRL – Waglass

- *100% public CAPEX funding required*
- *Glass supply subsidised by WARRRL - $XXX/MT*

a) WARRRL – Cleanaway

- *Private financing contingent on a 2-year payback period*
- *Glass supply subsidised by WARRRL - $XXX/MT*

4) How was the potential for part, or full, private sector funding was assessed?

The Expression of Interest process requested details on CAPEX, OPEX, risk factors and timing from two experienced suppliers with demonstrated capacity and interest in constructing and supplying RCG to the draft specifications in the Bunbury area.

5) Is there an intention to seek co-funding from beneficiaries (e.g., other agencies or the private sector)? If not, why? If yes, what is the status of negotiations or commitments to date?

Funding will be sought in part from:

a) The South West Gateway Alliance, through an Offtake Agreement:

- *As fulfillment of its local and Aboriginal content commitments, through generating ongoing employment and establishing the basis for a circular economic waste cluster at Kemerton.*
- *As fulfillment of its sustainability commitments through the Infrastructure Sustainability Council of Australia rating scheme.*

a) WARRRL, through a tonnage rebate, to be confirmed in the next steps in the legal and commercial agreement development process.

b) State Government, through seeking waste infrastructure funding recently announced by the Environment Minister.

APPENDIX E: Risk and Opportunity Register

Issues	Risks and Opportunities	Current Status / Controls	Mitigation and Controls	Control Owners SWGA, SWA, Supplier, LGA, MRWA	Control Closeout Date
Cost and timing	The cost and timing of establishing a RCG facility in Bunbury to create a supply from South West	The establishment cost and timing may vary and exceed original plan The estimated cost prepared as part of this business case may vary and be exceeded	Procure RCG from Perth for a trial. Participate in Towards 100 pilot program for a trial Undertake further investigations to give greater confidence on establishment costs and timeframe	SWGA, SWA, WARRRL, BHRC	Dec 2021
Funding	Lack of external funding and/or subsidy for the South West facility	BHRC seeking MRF funding / BHRC & Government decision	Procure RCG from Perth for trials / BHRC and Government decision	BHRC/LGA, Feds, SWDC/DPIRD, SWGA, WARRRL	Oct 2021
RCG price	Quoted prices for RCG products exceed budget	Quoted prices are non-binding and subject to change due to the specifications, product demands, more detail on establishment and other costs as well as the timing of the BORR project.	Use of RCG in the *Towards 100* pilot project will increase the level of confidence in the price. Develop new specifications for the *Towards 100* pilot as a legacy for the State	SWGA, SWA, MRWA, WARRRL, LGs	Nov 2021

Issues	Risks and Opportunities	Current Status / Controls	Mitigation and Controls	Control Owners SWGA, SWA, Supplier, LGA, MRWA	Control Closeout Date
License	Long approval times are required to obtain relevant licenses for the establishment of a RCG facility and for the supply of RCG end products	Multiple levels of approvals are required from various agencies. This could impact on the project timeframe.	Establish a taskforce to manage the application process more effectively.	SWGA, BHRC, WARRRL, SWA	Mar 2022
Specification	Glass produced does not comply with specification requirements Lengthy approval process from MRWA on specification	Draft specification has been prepared for certain applications. Endorsement from MRWA has not been provided. Specifications for other applications, e.g., use in pipe bedding and non-structural concrete elements is outside the current scope of this work.	A *Towards 100* pilot will provide confidence on the supply quantities, price, and quality. At the same time, it will provide an urgency for the specification to be approved.	SWGA, SWA, MRWA, LGs	Dec 2021
Quality Control	RCG products are fit for purpose	Products inability to meet performance criteria.	Commence *Towards 100* pilot to confirm performance characteristics.	SWGA, SWA, MRWA, LGs	Dec 2021

APPENDIX F: Balanced Scorecard

Options Description

Option 1

An RCG processing facility will be constructed by Waglass at the Bunbury Harvey Regional Council (BHRC) site at Stanley Road with glass supplied by WA Return Recycle Renew Limited (WARRRL) for use in the BORR and future road projects in the SW region.

Option 2

An RCG processing facility will be constructed by Cleanaway at its Bunbury/Dardanup site with glass supplied by WA Return Recycle Renew Limited (WARRRL) and Cleanaway's Albany Materials Recovery Facility for use in the BORR and future road projects in the SW region.

Option 3

A Material Recovery Facility and RCG processing facility will be constructed by Bunbury Harvey Regional Council at its Stanley Road site with glass supplied by SW yellow top bins and WA Return Recycle Renew Limited (WARRRL) to produce RCG for use in the BORR and future road projects in the SW region.

Option 4

RCG will be supplied from Perth for a trial in the BORR project to demonstrate the value and viability of RCG in road related infrastructure.

Balanced Score Card Key:

Absolute Benefits
Green – highest benefit
Light Green – significant benefit
Amber – moderate benefit
Red – limited benefit

Ranking Relative to other Options			
1	2	3	4

Focus	Criteria	Impact Type	Option 1: RCG plant at BHRC	Option 2: RCG plant at Cleanaway Dardanup	Option 3: MRF and RCG plant at BHRC	Option 4: Transport RCG from Perth
WA Government Policy	Waste Avoidance and Resource Recovery Strategy 2030	Absolute				
		Ranking	3	2	1	4
	Western Australian Buy Local Policy 2020	Absolute				
		Comparative	2	2	1	4
	Aboriginal Procurement Policy	Absolute				
		Comparative	2	2	1	4

Focus	Criteria	Impact Type	Option 1: RCG plant at BHRC	Option 2: RCG plant at Cleanaway Dardanup	Option 3: MRF and RCG plant at BHRC	Option 4: Transport RCG from Perth
	South West Recovery Plan	Absolute				
		Comparative	2	2	1	4
	South West Development Commission Strategic Plan	Absolute				
		Comparative	2	2	1	4
South West Economic Development	New Investment	Absolute				
		Comparative	2	2	1	4
	Business Growth	Absolute				
		Comparative	2	2	1	4
	Jobs Growth	Absolute				
		Comparative	2	2	1	4
South West Infrastructure	SW RCG facility to deliver to MRWA specifications Facility	Absolute				
		Comparative	2	2	1	4
Environment	Additional Landfill Diversion	Absolute				

Focus	Criteria	Impact Type	Option 1: RCG plant at BHRC	Option 2: RCG plant at Cleanaway Dardanup	Option 3: MRF and RCG plant at BHRC	Option 4: Transport RCG from Perth
		Comparative	3	2	1	4
	Carbon Emissions Avoided	Absolute				
		Comparative	3	2	1	4
Legislation	Waste Avoidance and Resource Recovery Act 2007	Absolute				
		Comparative	3	2	1	4
	Waste Avoidance and Resource Recovery (Container Deposit Scheme) Regulations 2019	Absolute				
		Comparative	2	2	1	4
	Western Australian Jobs Bill 2017	Absolute				
		Comparative	3	2	1	4
Government Stakeholders	South West Regional Waste Group	Absolute				
		Comparative	3	2	1	4
	Bunbury Harvey Regional Council	Absolute				
		Comparative	3	2	1	4

Focus	Criteria	Impact Type	Option 1: RCG plant at BHRC	Option 2: RCG plant at Cleanaway Dardanup	Option 3: MRF and RCG plant at BHRC	Option 4: Transport RCG from Perth
	South West Development Commission	Absolute				
		Comparative	3	2	1	4
	Regional Development Australia – South West	Absolute				
		Comparative	3	2	1	4
	Main Roads WA	Absolute				
		Comparative	3	2	1	4
	Department of Transport	Absolute				
		Comparative	3	2	1	4
Industry Stakeholders	South West Waste Recovery and Recycling Industry	Absolute				
		Comparative	3	2	1	4
	WA Waste Recovery and Recycling Industry	Absolute				
		Comparative	3	2	1	4

Focus	Criteria	Impact Type	Option 1: RCG plant at BHRC	Option 2: RCG plant at Cleanaway Dardanup	Option 3: MRF and RCG plant at BHRC	Option 4: Transport RCG from Perth
Community Stakeholders	South West Catchment Council	Absolute				
		Comparative	3	2	1	4
	Geographe Chamber of Commerce	Absolute				
		Comparative	3	2	1	4

APPENDIX G: Heads of Agreement (HoA) – Recycled Crushed Glass

Heads of Agreement (HoA) – Recycled Crushed Glass

The Parties

WA Return Recycle Renew Ltd (**WARRRL**)

Unit 1 Centro Avenue, Subiaco

South West Gateway Alliance, being a partnership comprising Acciona Construction Australia Pty Ltd, AECOM Australia Pty Ltd, Aurecon Australasia Pty Ltd, MACA Civil Pty Ltd and NRW Contracting Pty Ltd (**SWGA**)

Suite 3, 3 Craig Street, Burswood
Western Australia 6100

Sustainability Waste Alliance (**SWA**)
Stanley Road Waste Management Facility

Lot 45 Stanley Road
WELLESLEY WA 6233

Bunbury Harvey Regional Council (**BHRC**)
Stanley Road Waste Management Facility

Lot 45 Stanley Road
WELLESLEY WA 6233

Background

The Bunbury Outer Ring Road (BORR) is being built as a 27-kilometre free flowing highway in South West WA to link Forrest Highway with Bussell Highway. It also involves the construction of about 20-kilometres of local access roads. The BORR will provide efficient and safe access to the Port of Bunbury, local industry and industrial expansion areas and is essential for the long-term economic development of the Greater Bunbury area and the South West Region.

The construction of the BORR project has already commenced. The construction of local access roads is scheduled to commence in late 2021 and will continue for approximately 2 years.

The SWGA are the entity delivering the design and construction of the BORR.

SWGA is committed in its sustainability objectives to incorporate into the BORR works 100% of waste glass from the Greater Bunbury area that is not currently being recycled. They are exploring the potential use at least 20,000mt of recycled crushed glass in the BORR local access roads, subject to

development of specifications which are to be prepared by SWA after having sought approval from MRWA MEB and others, such as local governments as asset owners.

Through collaboration with SWGA, (SWA) and WARRRL a proposal has been put forward to supply recycled crushed glass end product to the BORR and other local road projects via a glass recycling facility in the south west that would be supplied with glass by WARRRL through the container deposit scheme, would be operated by BHRC with an offtake going to SWGA to use the specified end products in the BORR.

Consistent with the Recycle First Policy and Plan for the BORR, the BORR is intended to be a catalyst for RCG development and a potential foundation customer, subject to commercials and resultant product rates. The intent would be for BHRC to supply the products to other projects by state and local government and others post the completion of the BORR and for the business case and long-term viability to be predicated on that basis.

1. Purpose

The Heads of Agreement (**HoA**) is aimed at exploring the establishment of a glass recycling facility in the south west to supply and utilise specified recycled crushed glass products into a range of projects, BORR being one of those. Once the HoA has been executed by all parties a commercial process can begin with the main principles outlined below:

i. The commercial process would entail a business case being developed jointly under the leadership of the SWA Innovation Hub and with the input of selected industry contractors to determine the P90 capital and operational costs and benefits of supplying end product to the BORR and other projects.

ii. A commercial contracting process would take place under the leadership of the SWA Innovation Hub once the business case has been completed and a decision to proceed, or not to proceed, has been made by relevant parties.

iii. One or more experienced waste industry contractors would be engaged by BHRC to assist with developing the design, build and operations of the recycling plant.

iv. The SWA Innovation Hub would facilitate and audit the process to provide quality/value assurance and confidence of co-investors, who will become clearer once the business case process has been undertaken.

v. All parties would need to contribute to the project financially. This could be in the form of capital or operational costs, procurement of end products or other contributions. Other co-investment parties will also be sought as part of the process to secure financing.

vi. The CEO/Chairperson of each organisation is to sign this agreement with the CEO/Project Director and management team to then work on the commercial contracting arrangements.

2. The Parties

WARRRL – Supply Contract

WARRRL is the coordinator of the container deposit scheme in Western Australia under section 47X of the *Waste Avoidance and Resource Recovery Act 2007* (WA) (**Act**). As per the SWA Innovation Hub report to SWGA, WARRRL would enter a supply contract with BHRC for a minimum yearly supply of glass tonnes to be supplied to the glass recycling facility and would contribute a dollar amount per metric tonne for all tonnes WARRRL supply.

BHRC – Operator Contract

BHRC is the regional local government waste recycler that would enter an operating contract with SWGA and others whereby they would warrant the supply of durable recycled crushed glass end product to an agreed specification(s) to meet the project performance, capacity and program requirements. They would own, operate and maintain any facility which would be constructed on their land and provide storage for glass supplied and transport of end product to the BORR and other projects. They would obtain any licencing or approvals to do so. They would explore operational options to maximise the viability of the proposition. They would also engage with the SWA Innovation Hub and organisations with experience in building and operating glass recycling facilities to assist with the design and construction of the facility.

SWA – Facilitation Contract

SWA was established by OMTID/Main Roads to identify, address and facilitate waste recycling opportunities in the BORR that deliver reduced risk, optimised use of resources, improved integration, enhanced innovation, changes to the supply chain, etc. SWA would enter into an agreement with the other parties for the SWA Innovation Hub to lead the preparation of the business case for the supply of the recycled crushed glass end product to the BORR, to facilitate discussions with key stakeholders, and to project manage and audit the overall process to ensure it is quality assured and fit for purpose.

SWGA – Offtake Contract

SWGA would enter a time-limited offtake contract with BHRC for recycled crushed glass at a commercially viable supply rate(s) that meets their approved specification(s) and would commit to taking a certain volume of tonnes of that product(s) per annum on that basis, which they would pay BHRC (or their RCG partner) a dollar per metric tonne for all tonnes supplied under the contract.

Commercial waste contractors will not be a direct party to this HoA but are seen as being essential to the viability of the proposition. They will be heavily engaged through the process.

Other offtake agreements would need to be negotiated with other parties e.g., local government, to ensure the long-term viability of the project.

3. Non-Binding

Other than this clause 3 and clauses 4 and, this HoA does not create a binding agreement between the parties and will not be enforceable. Only future legally binding agreements, duly executed by the parties, will be enforceable. The terms and conditions of any legally binding future agreements will supersede any terms and conditions contained in this HoA. The parties are not prevented from entering negotiations with other third parties regarding the subject matter of this HoA. This HoA is governed by the laws of Western Australia

4. Release

The parties acknowledge and agree that no party will have any liability to another party, and each party releases each other from any claim, expenses or losses, arising out of the failure of the parties to reach agreement to proceed with the establishment of a glass recycling facility in the south west to supply and utilise specified recycled crushed glass products.

5. Confidentiality:

Each party acknowledges that another party may directly or indirectly make available to it documents of information of a confidential nature, including information on patents, trade secrets, proprietary systems, designs or processes and technical or business know-how, (hereinafter called "Proprietary Information"). Each party undertakes to protect Propriety Information belonging to each other party and agrees that it will not use such Proprietary Information other than for the purposes contemplated by this HoA and will not disclose or use any Proprietary Information belonging to another Party to any third party except with the express written agreement of the disclosing Party or where the third party is an officer, employee, agent, auditor, advisor, partner, consultant, joint venturer, contractor or sub-contractor of that Party or a Related Body Corporate of that Party who needs to know the Proprietary Information of the Discloser for the purposes contemplated by this HoA.

i. No party shall not acquire any right, title or interest in or to any Proprietary Information of another party.

ii. The obligations in this clause 5 do not apply to:

a) information which is or becomes generally available in the public domain (other than through breach of this HoA by the recipient party or an obligation of confidence owed to the disclosing party);

b) information lawfully received by the recipient party from a third party (that is not a related body corporate or a representative of the disclosing party); or

c) information which was already known to the recipient party at the time of disclosure by or on behalf of the disclosing party (unless such knowledge arose from disclosure of information in breach of an obligation of confidentiality).

6. Termination of this HoA

i. This HoA shall be effective from the day first written above and shall terminate on the earlier date of:

a) 6 months from the date of this HoA;

b) upon one of the parties becoming insolvent or otherwise being unable to carry on its normal business and receipt of termination notice by the other party; or

c) Upon written notice by any of the parties at their sole and utter discretion.

7. Timeline

Activity	**Completion**
Participants to sign the HoA	27th May 2021
Detailed business case complete	16th July 2021
Negotiate commercial contracts	31st August 2021
Detailed design and planning process complete	30th September 2021
Commence supply of recycled crushed glass product to the BORR project to align with BORR program	31st January 2022

APPENDIX H: Formal Response from Glass Suppliers

REDACTED

REDACTED

APPENDIX I: Formal Response from Waglass (Trial Sample)

REDACTED

APPENDIX J: Blending Cost

Associated blending costs shown below were obtained from the design and construction team at SWGA.

Pugmill blend throughput	400t /hour
Items	**Cost ($)**
Mobile/ demobilised pugmill and loader	$3,900 each way
Daily rate (10 hrs)	$3,380/day
Loader (to feed pugmill)	$1,550/day (includes labour cost)
Truck (to run blended material)	$2,730/day (includes labour cost)
Total Cost	**$ 11,560.00/ day**

The SWGA pugmill is capable of processing approximately 400t of RCG per day assuming the total blend contains 10% of crushed glass. Based on the assumption of processing a total of 5,000 tonnes of RCG per year, the pugmill will only be required for 12.5 days annually. This presents a mismatch with the high capacity of pugmill versus the low RCG quantity.

Therefore, consideration needs to be provided within the operating model to address an inconsistent stream of income to RCG producers as well as an imbalanced demand of material to coincide with blending operations.

SWA

Prepared by: Level 5 Design Pty Ltd